TEH

TG12508
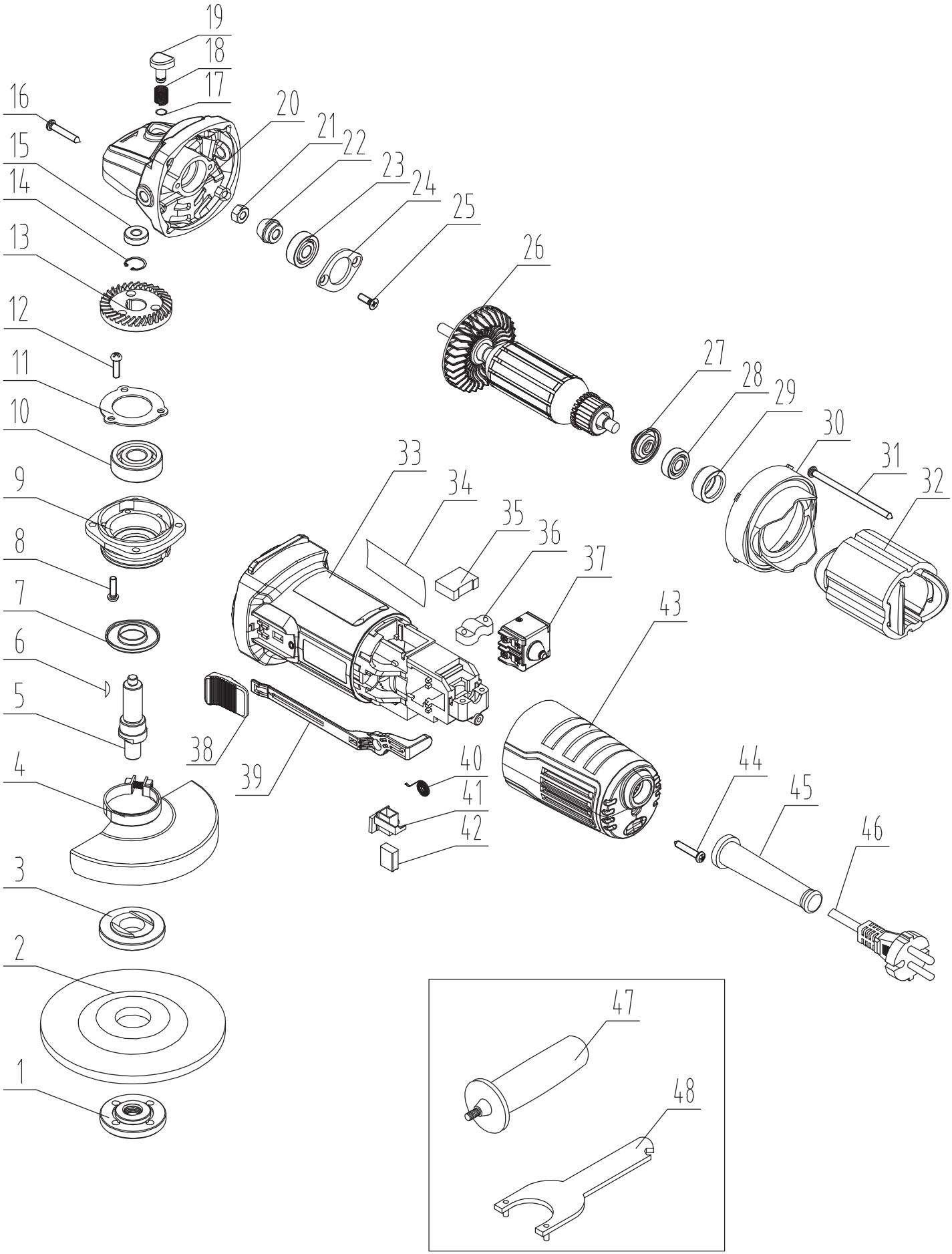
Angle Grinder