TBG20035
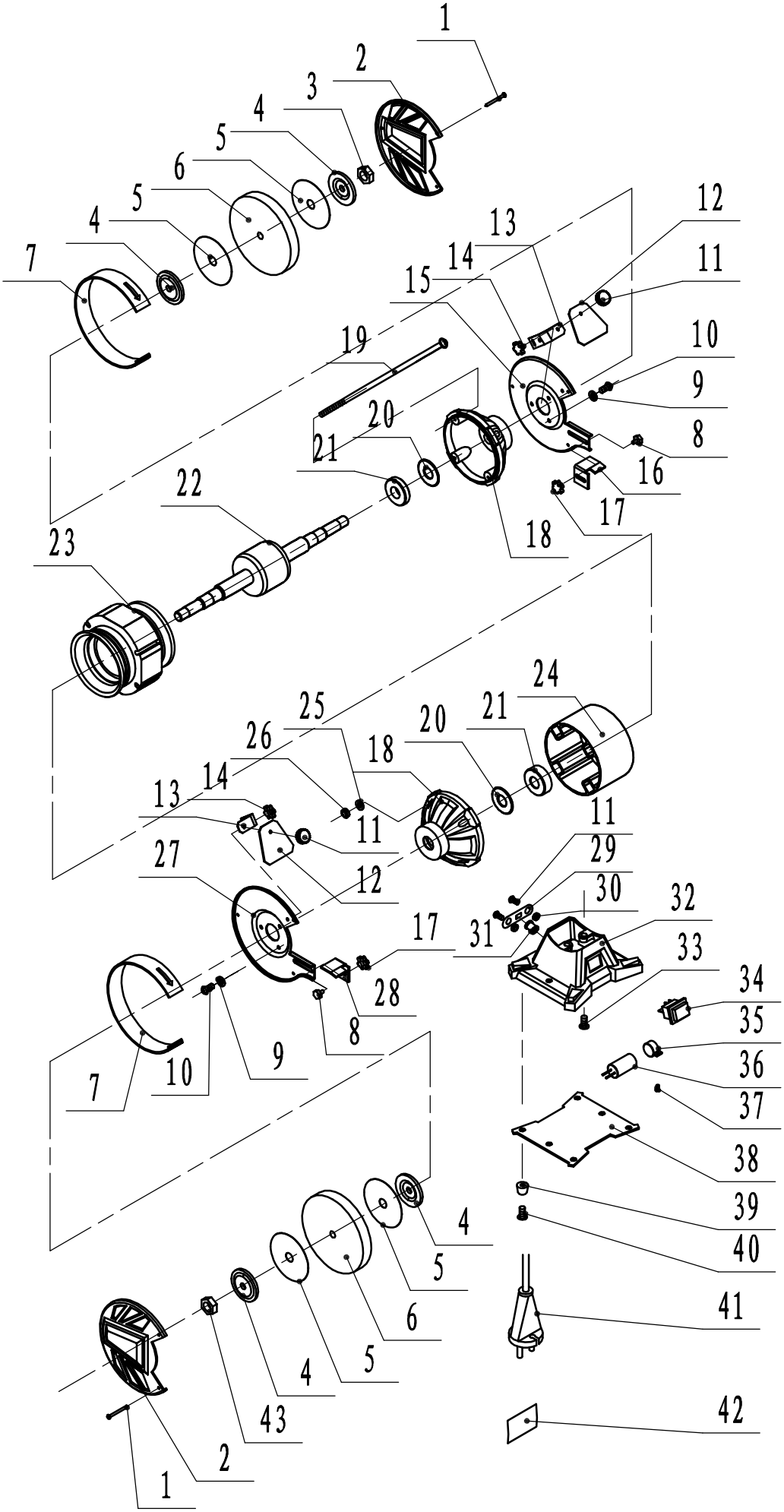
Bench Grinder